Instructions for using the towel dispenser:

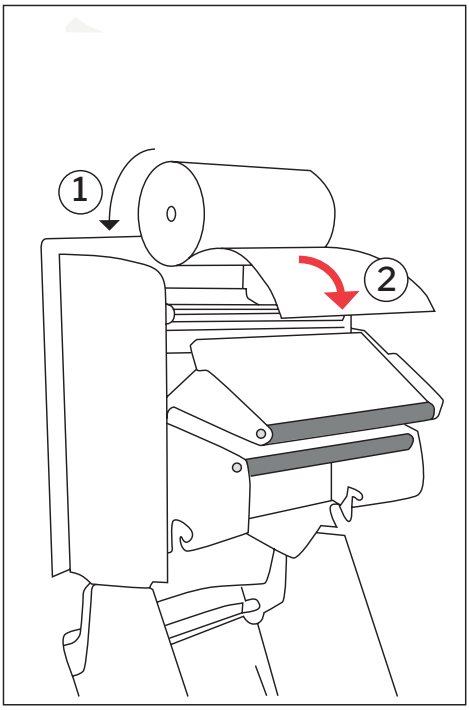

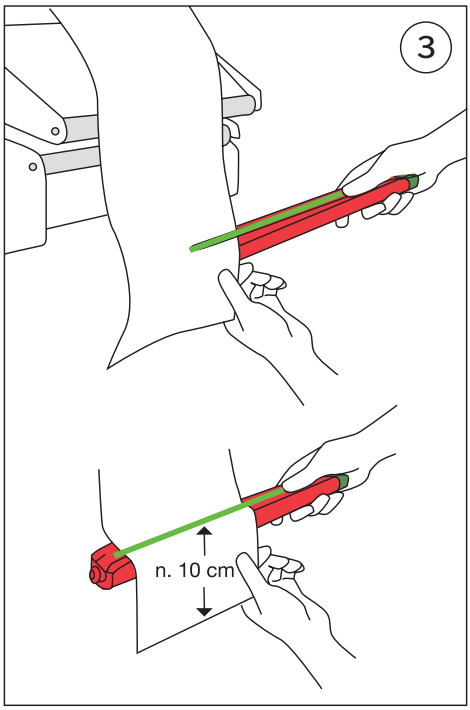

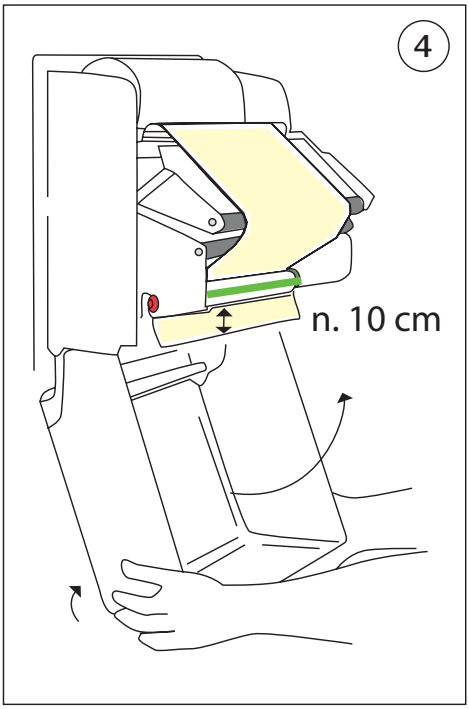

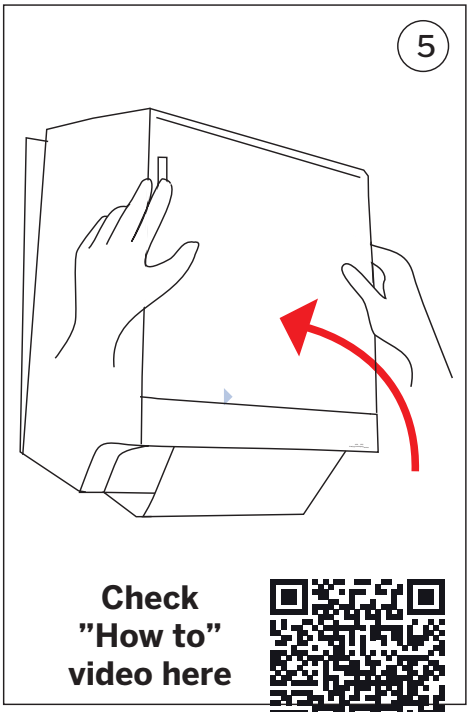

Lindström Oy, p. +358 20 111 600, www.Lindstrom.com