Lindström



CORE COTTON TOWEL ROLL DISPENSER INSTRUCTIONS

How to change the roll towel?

1.

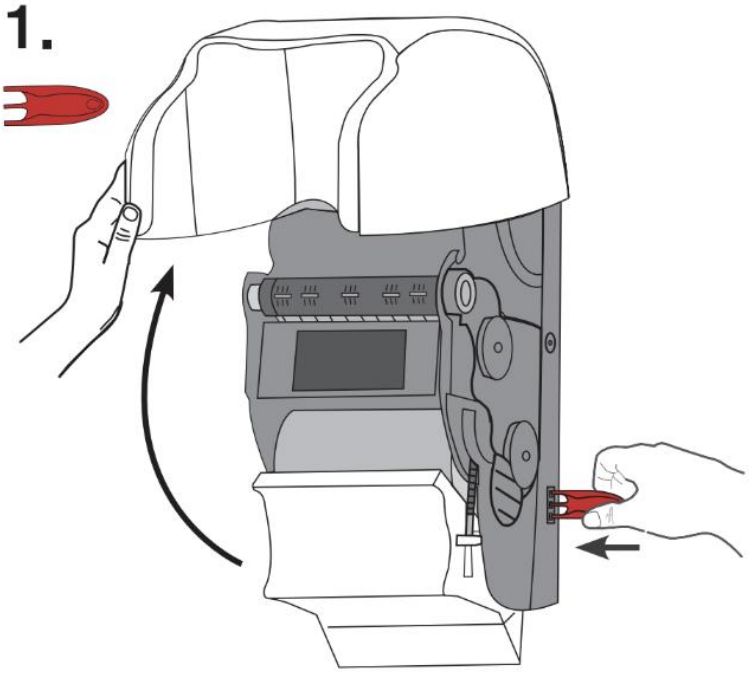

2.

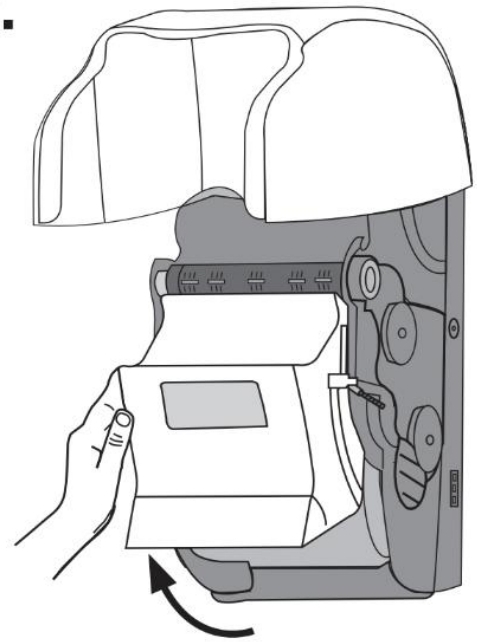

3.

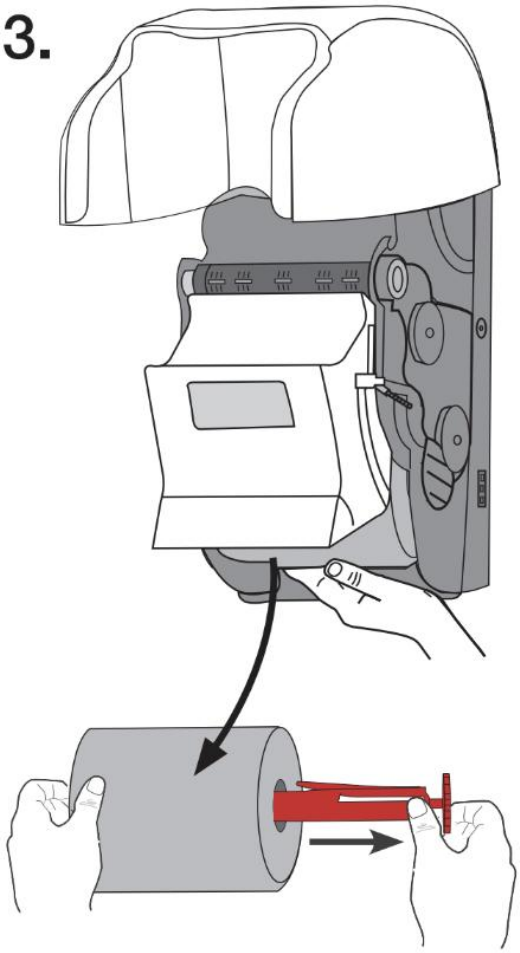

4.

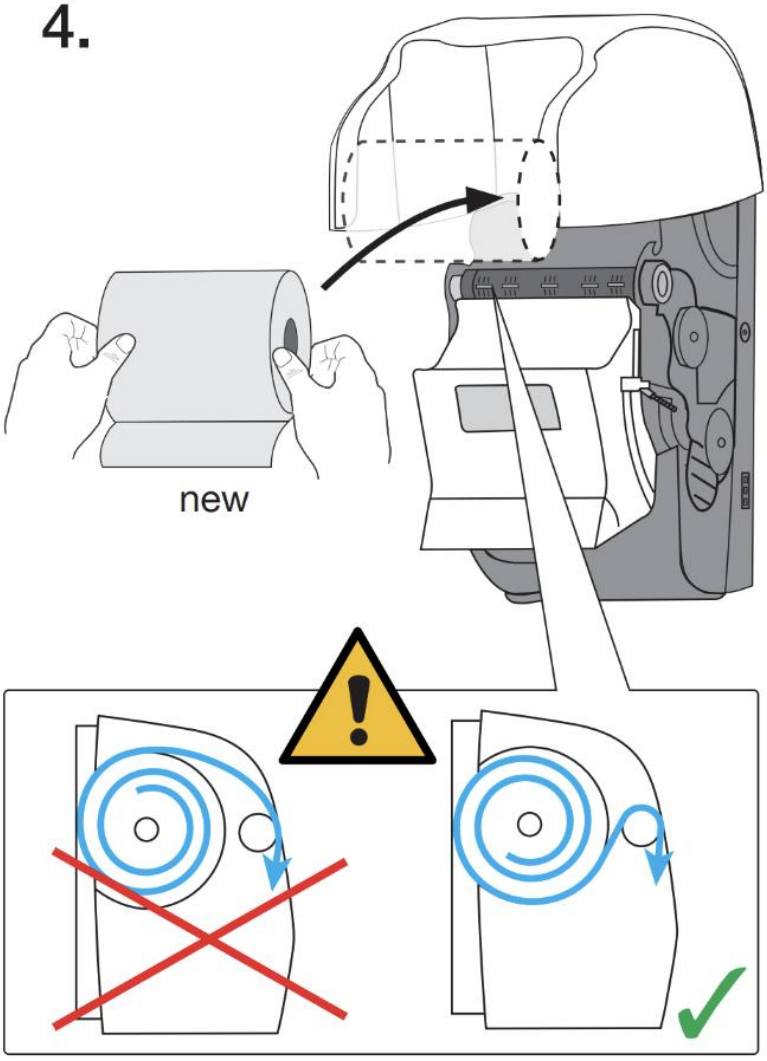

Lindström Oy, Hermannin rantatie 8, 00580 Helsinki, Finland Tel. +358 20 111 600

5.



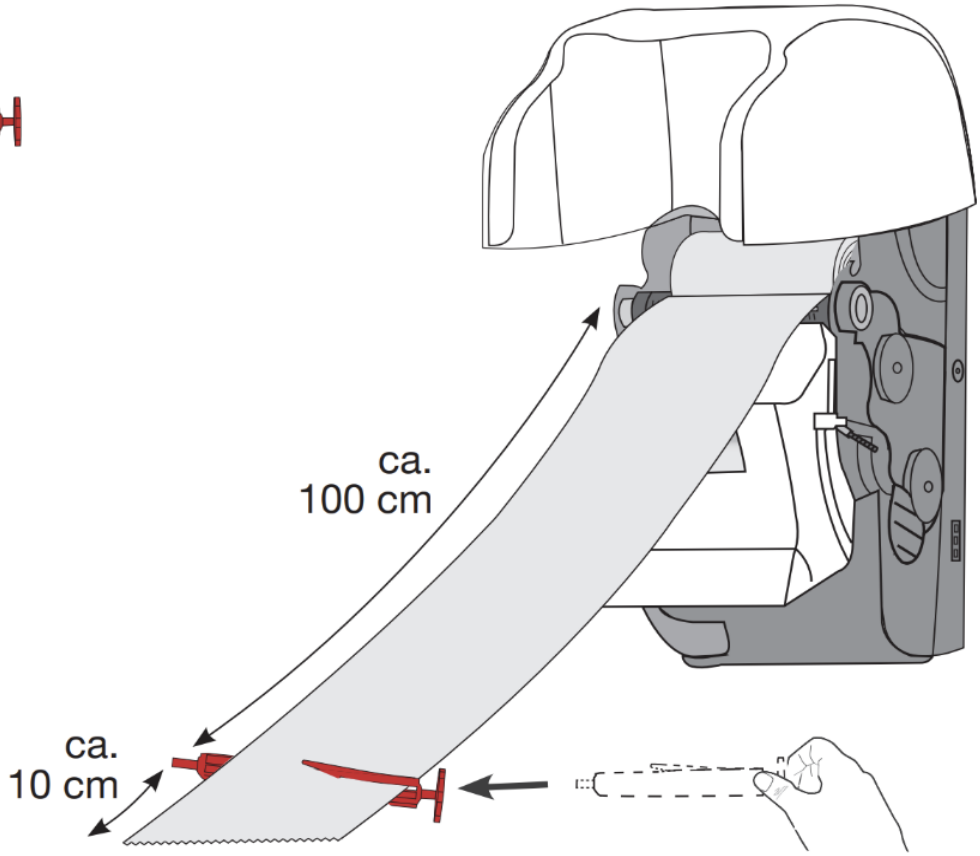

6.

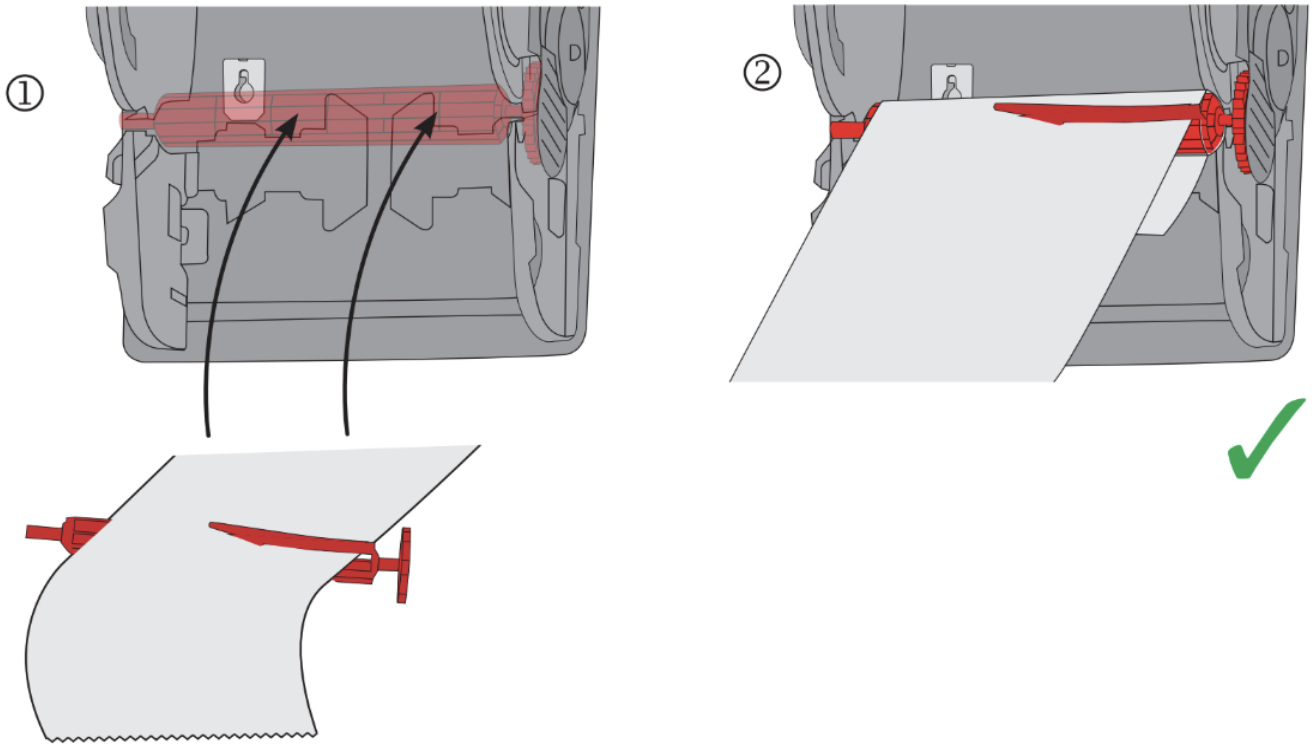

7.

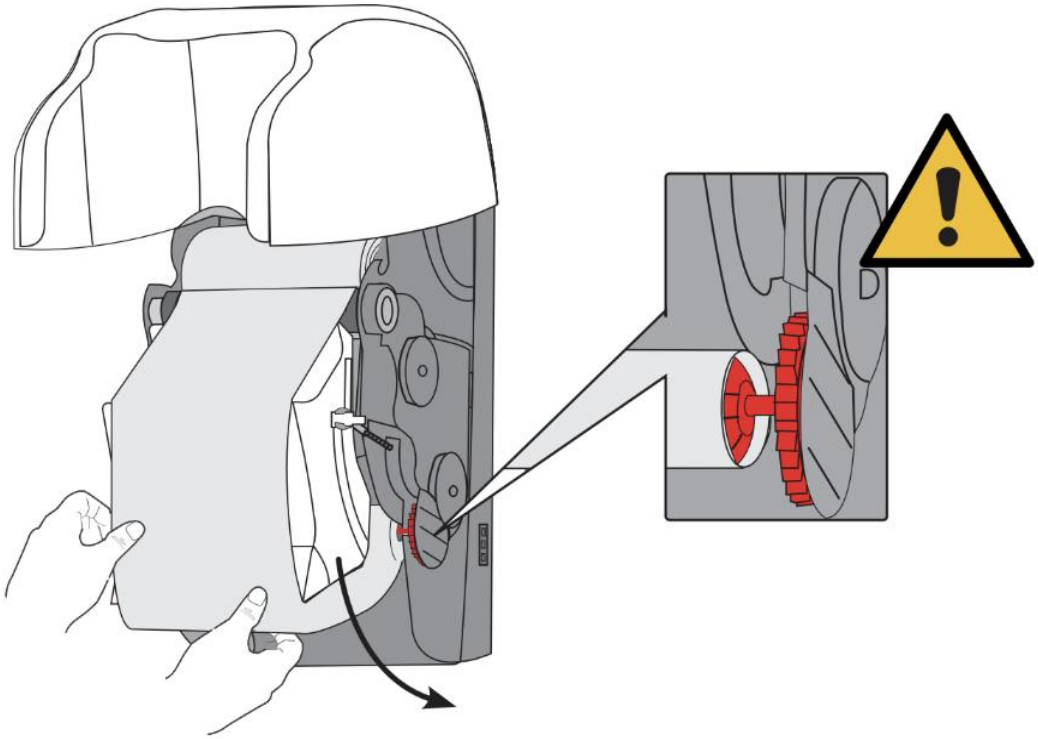

8.

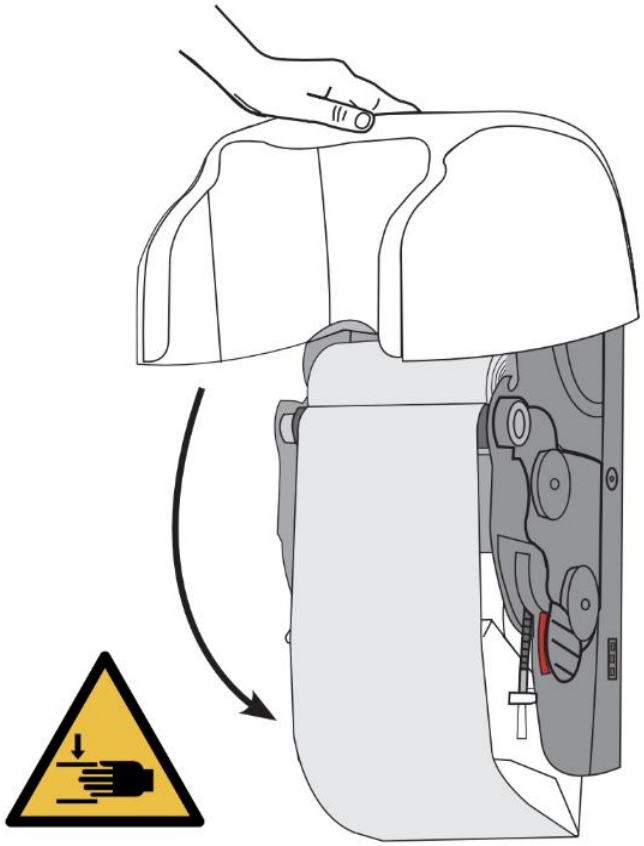

9.

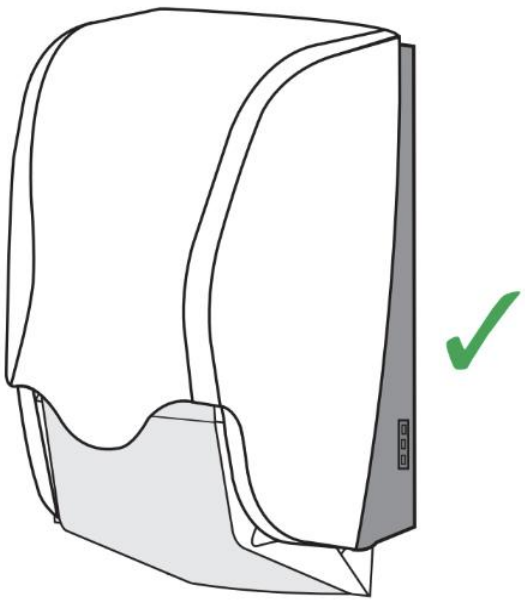

> 70dB

7.

Change half used rolls with automatic function

1.

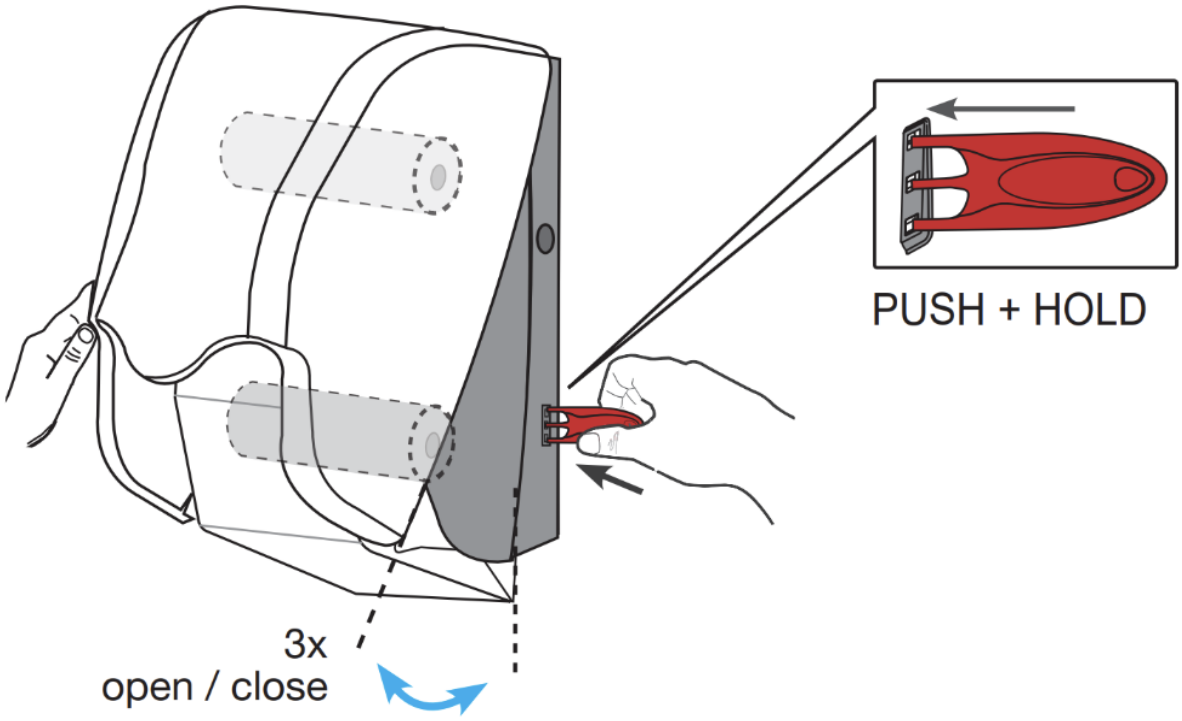

2.

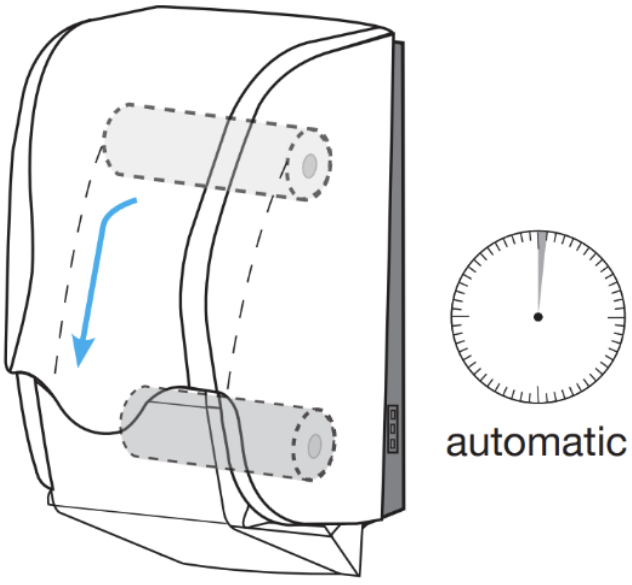

3.

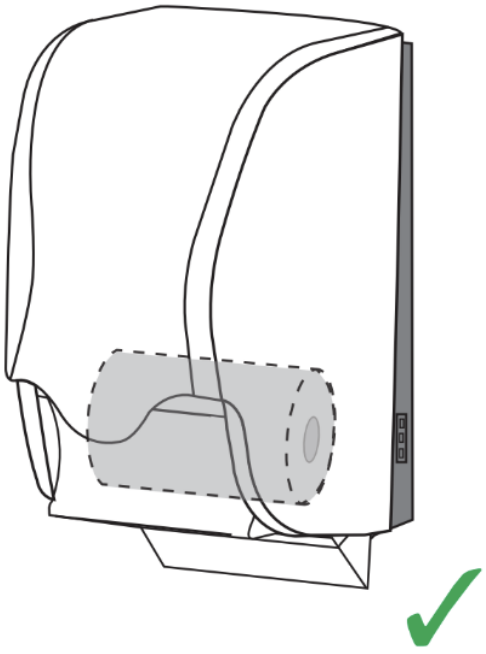

If the roll is to be replaced before the clean roll is completely used, the dispenser can rewind the remaining clean roll with the automatic rewind function.

To start automatic rewind:

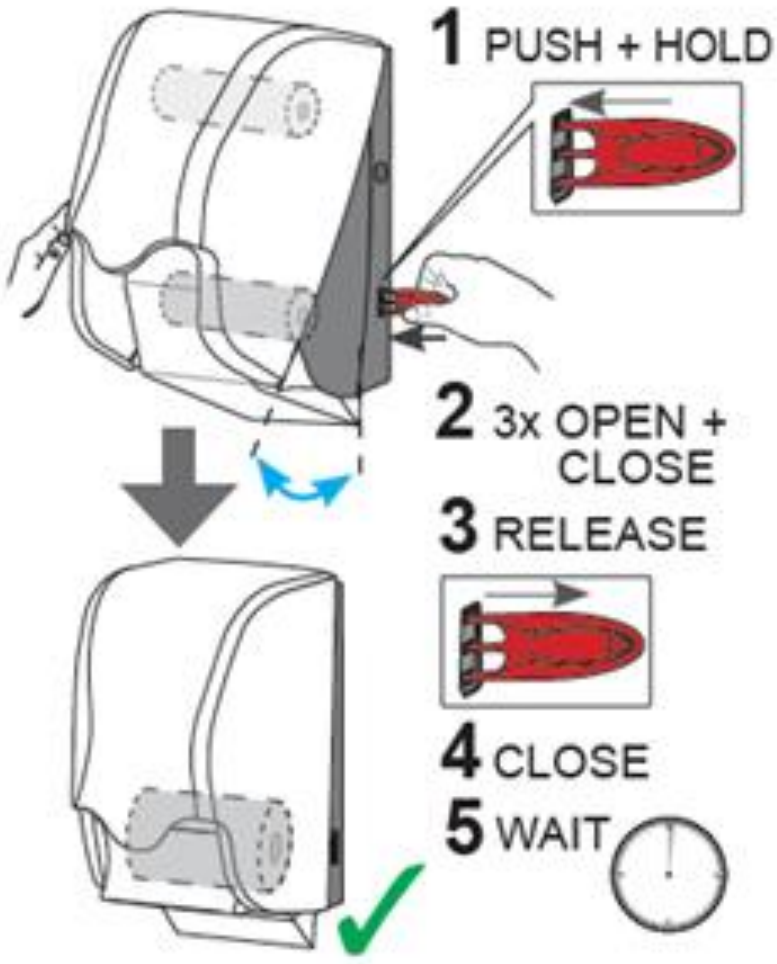

What does the LED indicate

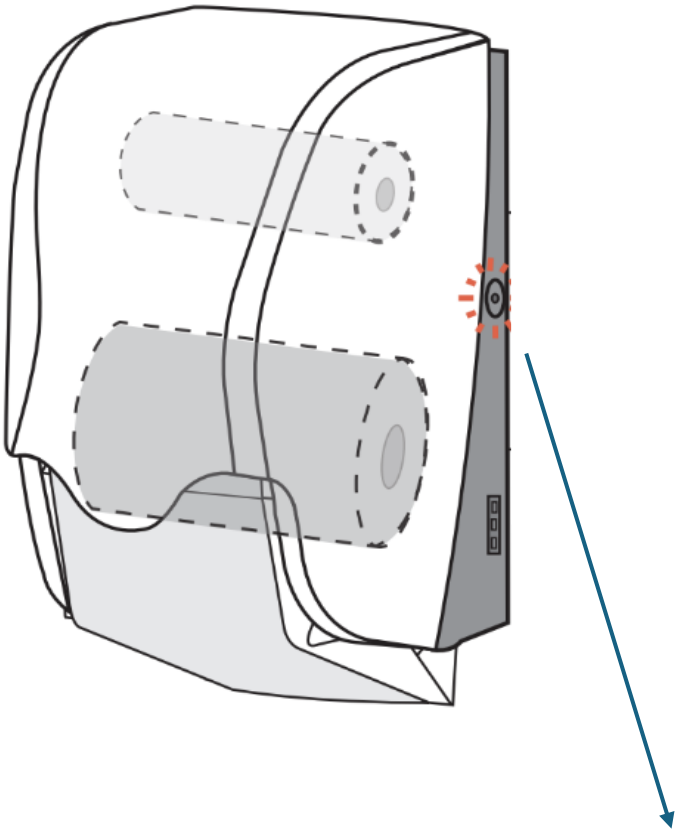

Battery connected	1s	
Towel level low	0.1s	4s
Towel empty	0.1s 0.2s 0.1s	4s
Battery level low	0.1s	2s
Battery empty	0.1s 0.2s 0.1s	2s

If the dispenser malfunctions

1:

- Please open and close the lid once.

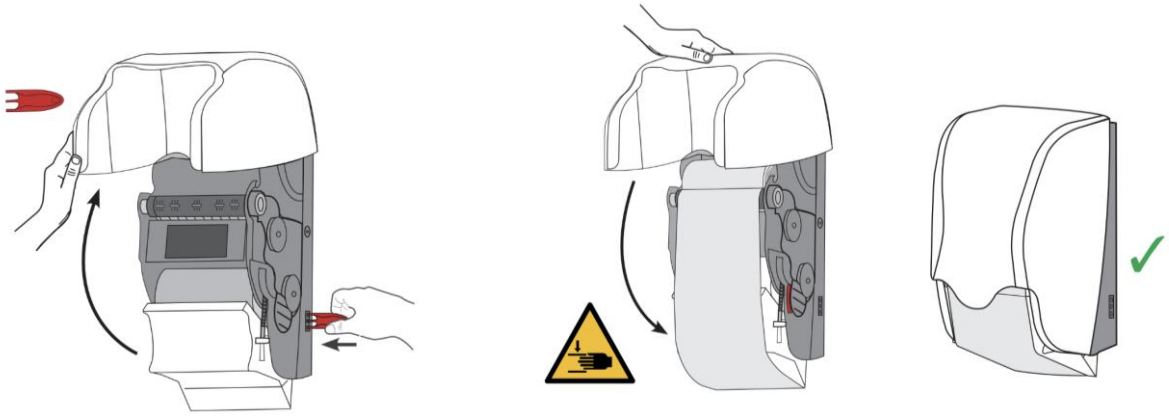

Or/and

2:

- Open the lid, take out the energyBOX for 3 minutes and put is back. Close the lid.

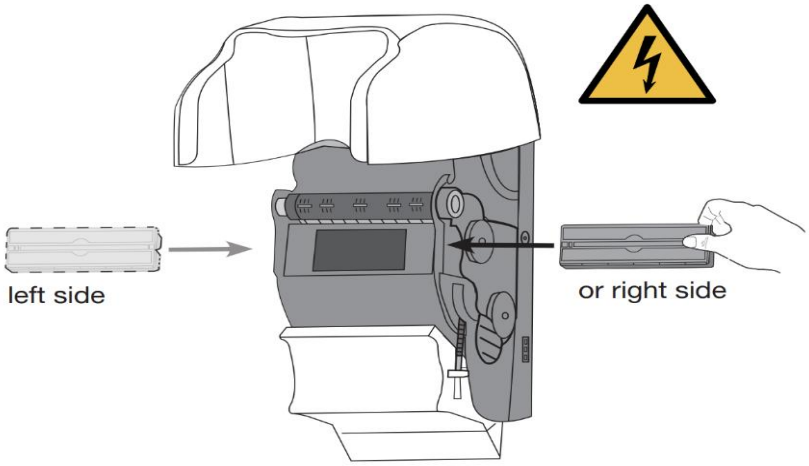

3:

- If the problem persists, order a service visit from Lindström for maintenance.

More product formation from Lindström product document library:
www.lindstromgroup.com/product-documents/

Or by reading a QR-code: